FRAEN Srl
Maximizing Light

FDP SERIES LENSES
For OSRAM GOLDEN DRAGON LEDs

- **High efficiency**
- **Available in 2 different beams**

The FDG Series offer low-profile lenses especially designed for the Golden Dragon [(1)] LEDs from Osram Optosemiconductor.

A software-optimized aspheric profile combined with front shaped micro-lens arrays enables the generation narrow beam and medium beam output patterns (2).

The high collection efficiency reaches 85% of the total flux emitted by the LEDs.
Lens holders are available either in white PC/ABS or transparent PC, and provide the proper alignment between the LEDs and the lenses.

Heat staking the four legs of the holder to the customer's PCB or heat sink provides excellent optical and mechanical assembly (see Fraen Application Note FAN01-EN (at www.fraen.com).

Typical applications are:

- Reading lamps
- Signs
- Architectural Lighting
- Street Lights

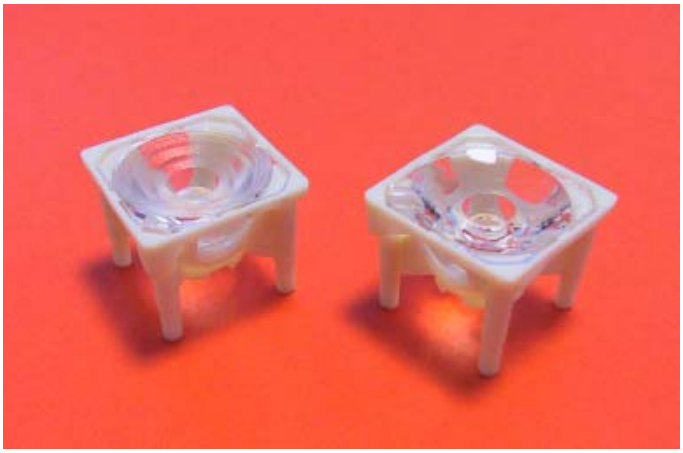

(1) Golden Dragon is a trademark of Osram OptoSemiconductor. For technical specification on LEDs please refer to the Golden dragon datasheet or visit www.osram-os.com

(2) Typical beam divergence may change with different color LEDs.

For ordering instructions, please contact

FRAEN CORPORATION	**FRAEN Srl**
Scott M. Grzenda	Maryline Thorailler
80 Newcrossing Road	Via E.Fermi, 7
Reading MA 01867	20090 Cusago (MI) – Italy
Phone: 781.205.5300	Phone: +39 02.90.39.40.49
Fax: 781.942.2426	Fax: +39 02.90.39.37.36

Email: optics@fraen.com
Website: www.fraensrl.com

General Characteristics

Lens Material	Optical Grade PMMA
Holder Material	PC ABS or Transparent PC
Operating Temperature range	-40deg C / + 80 deg C
Storage Temperature range	-40deg C / + 80 deg C

Average transmittance in visible spectrum (400 – 700nm) >90%, as measured using 3mm thick Optical Grade PMMA.

Optical Characteristics

		Typical beam total divergence (deg) (3)				
Lens Part Number	Type of lens	Blue Dragon	Green Dragon	Yellow Dragon	Amber Dragon	White Dragon
FDP-N1-D01-xx	Narrow beam	11	10	9.5	9	13
FDP-M1-D01-xx	Medium beam	16	16.5	16	15	18

(3) The typical total divergence is the full angle measured where the luminous intensity is half of the peak value.
The typical divergence may change with different color LEDs due to different chip size and chip position tolerance.

		Typical on axis efficiency (cd/lm) (4)				
Lens Part Number	Type of lens	Blue Dragon	Green Dragon	Yellow Dragon	Amber Dragon	White Dragon
FDP-N1-D01-xx	Narrow beam	10.9	15.5	22.8	15.6	9.6
FDP-M1-D01-xx	Medium beam	4.8	6.6	7.6	5.7	5.2

(4) To calculate the on axis intensity, multiply the on axis efficiency of the lens (cd/lm) by the total flux of the Dragon LEDs you use. For more detail on flux binning please check the datasheet of the Golden Dragon LEDs by Osram OS.

Please not that the above measurements have been taken with Dragon LEDs powered at 0.100A. The efficiency can vary with the current driving the LEDs.

Mechanical Characteristics

In order to get the best optical performances showed above, you need to have the exact mechanical position of the lens on the Dragon LED.

In order to do so, you need to use the lens you need (Narrow, Medium) with its holder.

Lens + holder assembly view:

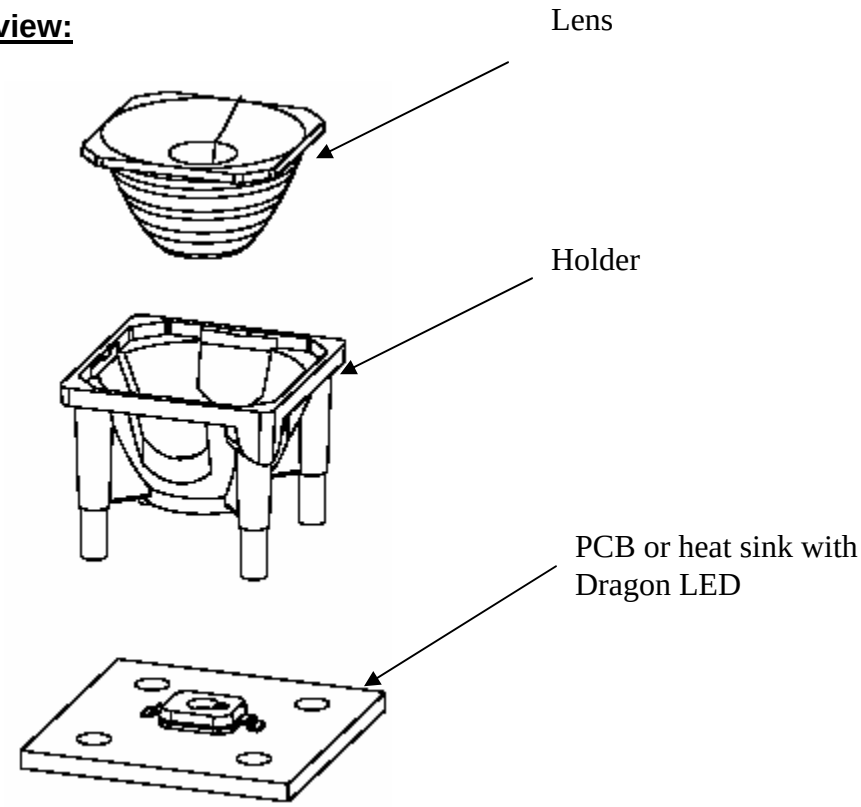

Lens + Holder assembly dimensions on PCB board:

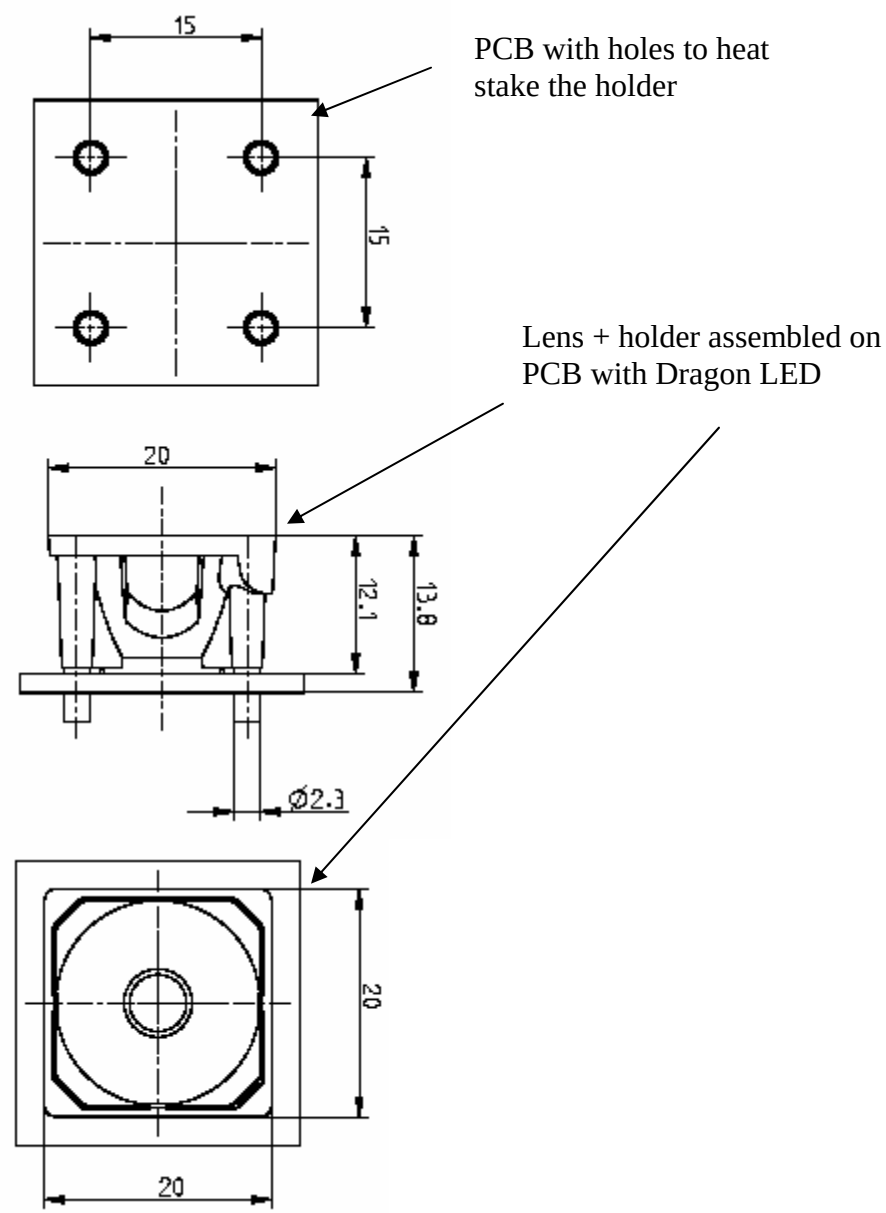

tolerances : +_0.2mm

The lens can be identified by the top view:

Narrow beam lens: 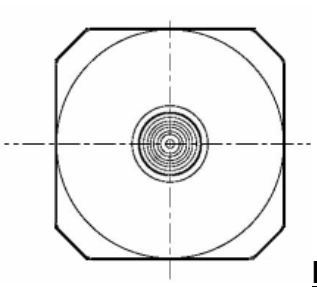

Medium beam lens: 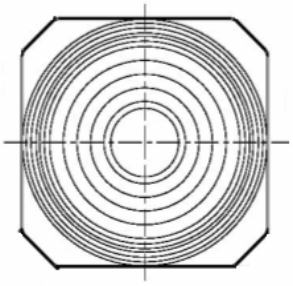

Please note that flow lines and weld lines on the external surfaces of the lenses are acceptable if the optical performance of the lens is within the specification described in the section “OPTICAL CHARACTERISTS”.

Ordering part numbers

FDP-xx-D01-zz

HS	square flange with PC ABS holder
HST	square flange with transparent PC holder

N1	Narrow beam
M1	Medium beam

Published by Fraen Corporation.
All technical data contained in this document are properties of Fraen Corporation and may change without notice.